BURROWS IS'D, WASH., LIGHT STATION.

PROPOSED KEEPERS DWELLING.

Scale 1/8=1'

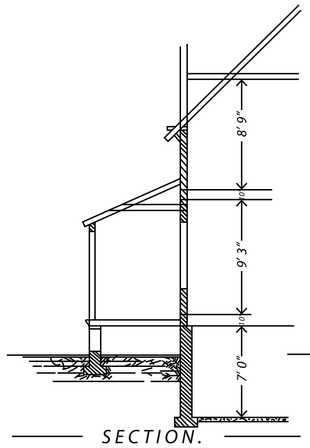

SECTION.

FRONT ELEVATION

SIDE ELEVATION

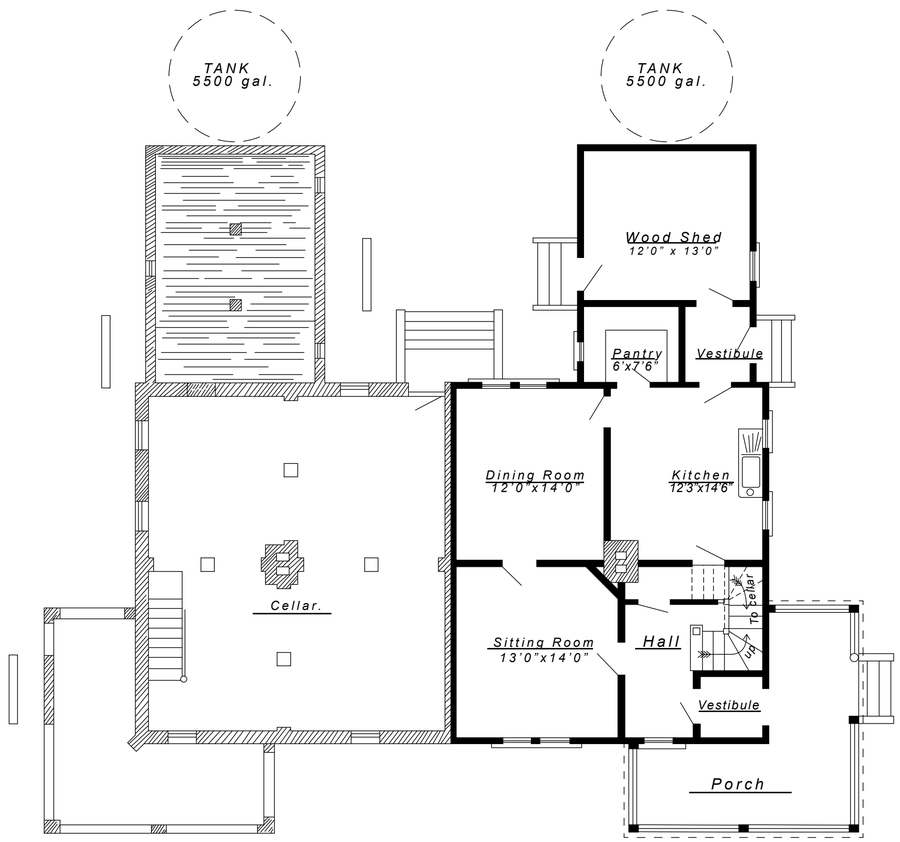

FOUNDATION PLAN — FIRST FLOOR

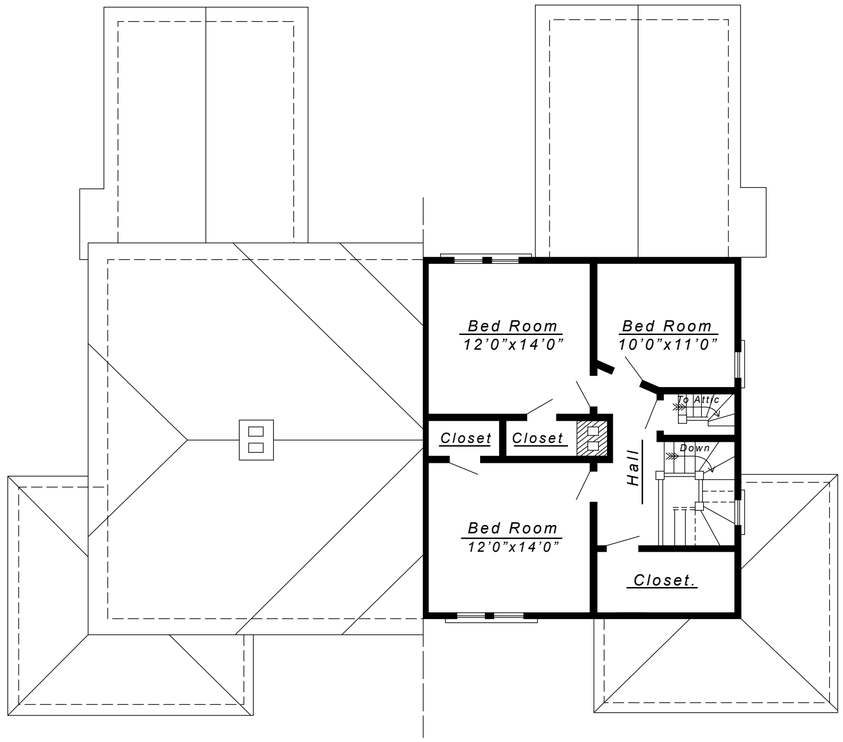

ROOF PLAN — SECOND FLOOR

C.W. Leich, Nov 1904.